

CANADA
4-H PEI

Rocketry
Member Booklet

Name: _____ **Club:** _____ **Age:** _____

Blast into this project as you discover the principals of model rocketry including rocket construction, science and flight. The new module project format allows members and leaders to decide what topics and activities that they would like to explore .

Project Completion Requirements

Project Items & Record Pages

- ☐ Complete at least five (5) project topics or activities
- ☐ Create at least two tangible items that will be on display at Achievement Day
- ☐ All activities/project meeting topics must be documented on the record page provided.
- ☐ Member Guide must be at the **CLUB** Achievement Day with **ALL** pages completed.
- ☐ ***NOTE:*** *Although the group may do activities together, project members are expected to document & display their own project/activity items at Achievement Day.*

Exhibition Requirements

Members are strongly encouraged to participate in the 4-H Classes at PEI Fairs & Exhibitions

- ☐ Members may choose **ONE** tangible project item to send on the Exhibition Circuit.
- ☐ Group members **do not** have to send the same items.
- ☐ Chosen item must be approved by the 4-H Specialist at the Club Achievement Day

4-H Year Completion

In order to complete the 4-H year members are required to:

- ☐ Complete the **PCR's (Project Completion Requirements**) as outlined above
- ☐ Complete a **Communication** Project
- ☐ Complete a **Community Service** Activity
- ☐ Complete an **Agriculture Awareness** Activity

Revised 2019

The Project Leader's Job

To begin, thank you for volunteering your time to be a 4-H project leader! We appreciate your time and willingness to teach today's youth a new skill and share your knowledge.

Becoming a project leader can feel overwhelming at first, but we hope that this page will make your "job" clear and offer some tips to help you be successful.

Responsibilities

1. Become a screened leader
   You may have already completed this step, but it is a very important one. The best place to go is to the 4-H PEI website and visit this page: https://www.pei4h.ca/4-h-leaders , to see if you have completed all the necessary requirements. Project meetings cannot begin until you have received a "conditional letter" from the Provincial 4-H Office.
   NOTE: As of July 2019 a new policy has been implemented by 4-H Canada that each project group be accompanied by two screened leaders. ***Insert more information about what National has to say about this policy and why they think it is important for this policy to be in place.***
2. Set Project Meeting Dates
   The amount and length of project meetings is determined by you, the project leader. That being said, you are responsible for covering **five** activities or topics (see project activity ideas pages) with the group. You may decide that you'd like to have five meetings - covering one topic per meeting, or you may decide to spend two 5 hour sessions with your group and cover multiple topics or activities in one meeting. This will also depend on the project you are leading. For instance, if you are leading a quilting project, then the member will be focused on one large item with multiple steps and skills involved. However, a rabbit project may require multiple meetings (and even locations) to cover different activities and topics. Meetings can begin anytime after November 15th.
   Whatever the case, we highly recommend that Project Leaders **set dates in advance of members signing up for the project.** This method will ensure the members know what they are signing up for, or enable them to make a decision to not sign up if they cannot commit to the dates listed. We also hope that this will avoid a lot frustration for you, because working around multiple schedules is almost impossible!
3. Choose Topics and Activities
   You may choose to work on this step before setting dates for project meetings. Some topics and activities may be able to be covered in one project meeting, while others may need their own meeting. Regardless, we ask that you document your project meetings and topics covered on the next page so that the 4-H Specialist can refer to this information at Achievement Day if necessary.
4. Materials & Supplies
   While you are responsible for determining what materials and supplies are needed, you **are not** responsible for covering these costs. Options to consider:
   A. 4-H Canada has a FCC 4-H Club Fund that all leaders are welcome to apply to. These grants are valued at $500 each. Applications are accepted August through to the end of October.
   B. Asking for supplies. Depending on what project you are leading, just putting a call out for the supplies you need to friends, family, etc. may be successful
   C. Determine an estimate total for the materials and supplies needed and set a "project fee" that all members will pay to help cover the additional costs
5. 4-H Year Completion and Project Completion Requirements
   The project leader **is not** responsible for 4-H Year Completion (these components will be completed at the Club level) though each member **must** complete these components. Project leaders should focus on the Project Completion Requirements, found on the front cover of this guide. These are the items that the 4-H Specialist will expect to see on display at the Club's Achievement Day (typically scheduled for June-July).
6. Club Meetings & Events
   Project leaders are not expected to attend monthly club meetings, but are more than welcome to attend if they'd like to know what is going on at the Club, Provincial or National level of 4-H. Similarly, Club events and activities are open to project leaders, but it is not necessary to attend. Project leaders are encouraged to attend Achievement Day. This is an event that wraps up the Club's 4-H year and a celebration of member success.

The Project Leader's Plan

After reviewing the Project Completion Requirements list on the front of this guide, review the Project Activity Ideas page/s. You can also pull ideas from past experiences, books, social media, online or you can plan to join a took, attend an event or book a guest speaker. The sky is the limit! Regardless of what activities or topics you decide upon, you should choose five in total. It might be a good idea to ask the 4-H members in your project group what they envision before making a concrete plan. In some cases, the project group members may depict what activities or topics based on what project item they have in mind.

Topics and Activities

1. _____

Supplies needed:

_____ _____

_____ _____

_____ _____

2. _____

Supplies needed:

_____ _____

_____ _____

_____ _____

3. _____

Supplies needed:

_____ _____

_____ _____

_____ _____

4. _____

Supplies needed:

_____ _____

_____ _____

_____ _____

5. _____

Supplies needed:

_____ _____

_____ _____

_____ _____

Rocketry

In this project, you will examine, through a hands-on approach, the progression in understanding the four basic forces that affect flight to the making and launching of homebuilt rockets. The project meetings are designed to engage you in the discovery process. It is important you understand that you can learn just as much from your mistakes as from your success in the design process.

Planning Your Project

- **Review** & **Select** the activities which you want to learn more about based on your division level - *possible topic choices are included on the next page!* Leaders and/or members are also invited to research and create their own project activity.
- **Discuss** with your project leader the project activity outlines as explained in the guide. The Leader Resource (*available at the 4-H PEI Office*) does include more detailed instructions for some project activities.
- **Identify** your goals & time-line for completing chosen project activities

Helpful Resources!

www.greathobbies.com/rockets.com

www.calgaryrocketry.org

www.nar.org

www.canadianrocketry.org

www.coastrocketry.com

If you are looking for help with one of your project activities, let your 4-H Specialist know, maybe we can help you out!
Call 368-4833 or drop by the PEI 4-H Office at 40 Enman Crescent, Charlottetown.

Remember...

The multiple intelligence theory teaches us that people learn in at least 8 different ways. All individuals will be stronger in some ways of “intelligence” and weaker in others. It follows that the more ways we teach, the more members we will reach. Teaching projects using a broad blend of writing, reading, hands on work, artwork, self evaluation, discussion, and so on, will help increase the learning potential of all members.

Projects are designed to teach many skills. However, the 4-H member is always more important than the subject matter. Stress cooperation in the activities where possible to develop teamwork and cooperation skills. These are valuable skills that will assist them in a number of settings. Ensure the work is completed in a manner that members feel good about themselves and their efforts. This can be done by assigning appropriate tasks or roles based on member’s individual abilities. Modeling and expecting supportive behaviour (i.e. no “put-downs”) amongst members, or by other adults, also contributes to a positive experience.

Project Activity Ideas

- **Activity #1:**
Learn about the parts of a rocket, create a flight log and how to stay safe while learning about rocketry!

- **Activity #2:**
Characteristics of Fluids (air) air is a fluid, has mass and takes up space. Can Crusher, Maple Seed Flyer.

- **Activity #3:**
Moving Air creates lift and different air densities create lift (ex: Hot air balloons). Learn about Bernoulli's Principle - faster flowing air exerts less pressure than slower moving air and design a

- **Activity #4:**
What are the forces acting on Aircraft in Flight? Learn about thrust, drag, lift gravity by creating straw planes.

- **Activity #5:**
Discover how to control flight with Ailerons, vertical and horizontal stabilizers. Put your knowledge to use by creating a Styro glider

- **Activity #6:**
Airplanes vs Rockets. Learn about the basic design differences between rockets and airplanes through individual exploration of space travel topics by using Venn diagrams and K W L Charts

- **Activity #7:**
What is Rocket Propulsion? Learn about an imbalance of forces that cause a rocket to launch by using Alka Blasters and a Balloon as thrusters.

- **Activity #8:**
How do we achieve Stable Rocket Flight? Rockets must have control surfaces and attention must be paid to centre of gravity in designing rockets. Members will observe some basic safety guidelines.

- **Activity #9:**
Model Rocket Flight! Members will assemble a model rocket from a kit and launch it! Members will incorporate the concepts learned in the previous project meetings into designing, building and successfully launching a home built model rocket.

- **Activity #10:**
Celebration Launch! Members will celebrate their success with a family launch and showcase their learning in some form of presentation!

New Format. New activities. New ideas.

- In its first year of the new project format, the 4-H staff welcome any feedback, questions or concerns about the Rocketry Project. Please do not hesitate to get in touch. Further instructions are provided in the Leader Guide.
- If you have an idea or topic in mind for a project activity that relates to blacksmithing, be sure to talk to your project leader! The new project format allows you to review, discuss and select activities that interest you and your fellow 4-H project members. If you don't see something that you are interested in, suggest a new idea! Have fun with it!

Project Activity #1 - Rocketry

Concept:

- Welcome to the Rocketry project! For your first meeting it is important to go over some of the basic concepts that you will be learning.

Blast Off One: Create Your Flight Log

- In a notebook; you will write down what concepts and lessons you have learned from each meeting.
- It is important to have something to look back on from meeting to meeting so you don't forget!

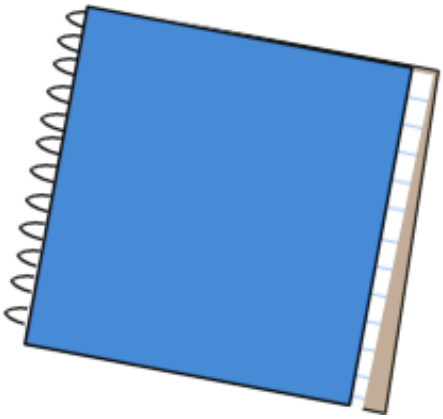

Blast Off Two : Label and learn about the Parts of a Model Rocket

- Create a drawing of a rocket in the first page of your flight record.
- Label each part and put a description of what each part does!

Figure 1:

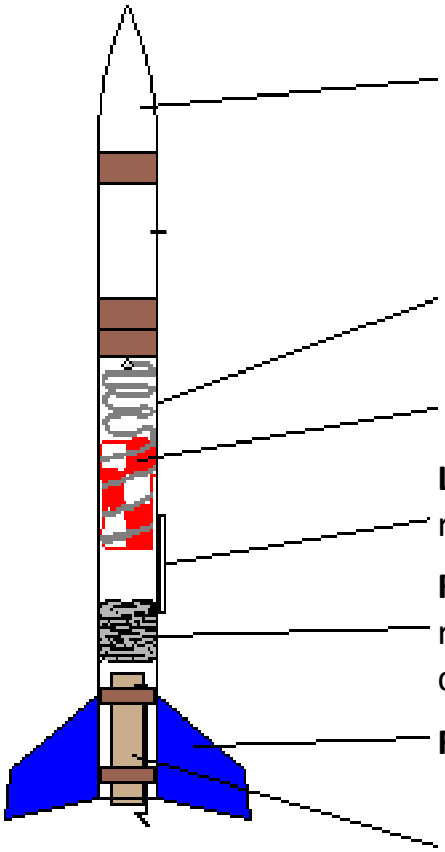

The Nose Cone: helps the rocket be aerodynamic and pass through air

Body Tube: Used to provide stability during the launch and flight

Recovery System: consists of a parachute and the lines that connect the parachute to the nose cone

Launch Lugs: small tubes attached to the body tube to give the rocket stability during the time of launch

Recovering Wadding: put between the engine mount and the recovery speeding to stop the heat from the ejection charge damaging the recovery system.

Fins: used to provide stability during flight

Engine Mount: is where the thrust for the propulsion of the rocket comes from

Source: https://www.grc.nasa.gov/WWW/K-12/rocket/rktparts.html

Project Activity #2 - Characteristics of Air

Concept:

- Air is a fluid, just as water and syrup are fluids. Fluids are "***substances that have the ability to flow and take the shape of the container into which they are poured***".
- There are weak forces of attraction between the molecules of a fluid, which allows the individual particles within the fluid to flow around one another. This is different from solids, in which the individual particles are firmly held in place by strong bonds. Gasses such as helium, neon and steam have the weakest bonds, which enables them to spread out rapidly.
- Given the definition of fluids, many people mistakenly refer to sand, rice and other materials made up of very small particles as fluids. The difference between these substances and fluids is that ***fluids do not form a pile when poured in one spot.***
- The Can Crusher activity will show that air exerts enormous pressure. We are use to the pressure that it exerts on our bodies, but are amazed when we see air crush a can. The Crushing Can demonstrates that cool thick air has a higher pressure than rising warm air.
- When the can is sealed off by the ice water, preventing the cooler air from entering into the can, the enormous amount of higher air pressure in the room crushes the can in trying to equalize the air pressures.
- This project meeting is introductory in nature, and is built around two demonstrations. Members should try the Can Crusher, *with proper adult supervision.*

Key Objectives -

- define the term fluid using concrete examples
- explain how air has mass, takes up space and is able to exert pressure

Blast Off One: Wet or Dry?

Required Materials

- plastic cup (1 per member) , tissue paper, clear bowl of water, hot plate or stove element, bucket of ice water and kitchen tongs (ones with rubber ends work best so that the can does not slip out of the grip of the tongs), or oven mitts

Instructions:

- Use the plastic cup, tissue paper and the bowl of water in this activity.
- Is the bowl of water an example of a solid, liquid or gas? Can water be both a liquid and a fluid? Water is an example of a fluid because it fits the definition of a fluid as outlined in the Science Background on the previous page which states ... ***"fluids are substances that have the ability to flow and take the shape of the container into which they are poured".***
- Can a gas such as air be a fluid? Yes, air is a fluid. Air can flow (wind), has weight (cold air sinks when the freezer door on the fridge opens), and air takes up the shape of the container that it occupies. This demonstration will reinforce your understanding of this concept.
- look at the bowl of water, the tissue paper and the plastic cup. What would happen if the tissue was put into the water? Now put the tissue paper in the water to see if you were right.
- What would happen if the tissue was put into the bottom of the cup, and then the cup placed open end down into the water? Wad the tissue paper into the bottom of the cup. Then turn the cup upside down, push the cup opening down onto the surface of the water. What is happening to the tissue paper while you continue to push the cup to the bottom of the bowl?
- This demonstration shows that air takes up the space between the surface of the water and the tissue paper. Water can't compress the air to reach the tissue.

Project Activity #2 - Characteristics of Air

Blast Off Two: Can Crusher

Now you know that air takes up space, and has mass (weight). Do you think that air can exert pressure? Is wind an example of pressure?

Air exerts pressure on us all the time on all parts of our bodies. In fact, the atmosphere extends to about 200 km above the Earth's surface.

The amount of pressure of all that air on each of us is like sitting under a pile of sand 6 m tall (about the height of a two-story column 1 m wide). We don't feel all that pressure because we are use to it. People who live high in the mountains live under less air pressure than people who live at sea level. Air is dense at sea level and gradually thins out as altitude increases.

Activity:

1. Place a teaspoon full of water into the pop or juice can, and place the can on the hot plate.
2. Wait until steam is rising out of the can, and then using the tongs (or oven mitts), quickly turn the can over onto the surface of the ice water.
3. There will be a loud "pop" and the can will be crushed.
4. Lift out the can, cold water should drain out of the can.

NOTE: If the can fails to be crushed, try boiling more water, so a better steam can be produced. It may also be that the can wasn't turned over quickly enough, or that too much ice got in the way of a proper seal between the water and the can.

NOTE TO LEADERS - reasonable caution must be used in this activity. Suggest leader practice the activity at home. Be aware of any inherent hazards in using hotplate/stove elements around members. Also use tongs that have hard or soft plastic grippers. This will eliminate the chance that the pop can will squirt out when it is lifted from the hotplate. It is always a good idea to try this demonstration prior to showing it to members.

Figure 1:

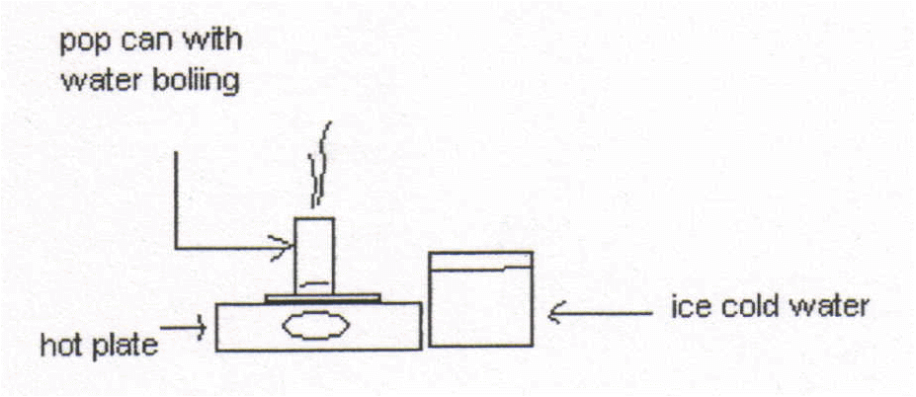

Project Activity #3 - Moving Air

Concept:

- The temperature of air determines if its molecules are packed closely together, or spread apart. A cold air mass has its molecules packed closely together, whereas warm air has its molecules spread further apart than cold air. This means that cold air is dense and exerts a higher pressure per metre than warm air. Because cold air is more dense than warm air, it tends to sink (like when you open the door of the freezer compartment of the fridge), whereas the warm air rises.

- Essentially warm air rises as it is being pushed up by cold air sinking in below it. Helium balloons rise because air is much more dense than helium. The balloon is pushed up rapidly because of all the dense air around it. This is much like watching the carbon dioxide bubble rise in soda pop.

- This is the principle on which hot air balloons work. Lighter/warmer/less dense air rises and creates lift. But this isn't necessarily the same for airplanes.

- Airplane wings produce lift because of a difference in air pressure. The difference in pressure is created by the shape of the wing. Look at a wing (either bird or airplane). Notice that the top of the wing is rounder than the bottom, which is relatively flat. As the plane goes forward on the runway, thanks to the propeller and engine, air is forced over and under the wings at the same time. Air has a longer way to go over the wing, because of its rounded shape (called cambered airfoil), than under the wing. Because air is "stretched" or thinned out over the top of the wing, it has less air pressure than the air under the bottom of the wing.

- This means that the high pressure of air under the wing will actually push up on the wing to get at the area of low pressure. This is what creates lift. This is an application of Bernoulli's Principle, which states that a fast moving fluid exerts less pressure than a slow moving fluid.

Key Objectives-

•Explain how differences in air temperature create different densities and cause hot air balloons to rise.
•Explain how moving air over a wing creates lift.

Project Activity #3 - Moving Air

Blast Off One: Hot Air Balloon

Required Materials

- Large garbage bags (one per member), or large dry cleaner bags if available (without holes in the top where the hangar goes if possible)
- String
- Several hair dryers
- Construction paper
- Strips of paper 10 cm wide by 25 cm long
- Clear tape
- Pencils

Instructions:

1. How do you think hot air balloons work? Hot air rises because it is less dense than cold air. Now you will have a chance to make your own hot air balloon.
2. Use the hair dryer, put the temperature on high, and if possible, the air on low
3. Have several members hold the bag open over the hair dryer. The bag will fill with hot air.
4. When you feel that the balloon is hot enough, let go.
5. The balloon will rise and yet the open end will allow cold air in and the balloon will collapse.
6. Repeat the activity but this time close off the open end of the balloon and observe the difference in your results. Record the results.
7. Can you make and attach a small basket to your balloon? Will it fly? If you are successful with this, try and carry other items of different weight.

Blast Off Two: Design a Wing

Instructions:

1. Hold a piece of paper by the edges of one end. Bring it up a few centimetres from your mouth, and blow across it with a steady force. The paper should rise and flap out away from your mouth. What's happening? Remember that the fast moving air over the paper has less pressure than the still air below it. The still air then tries to get at the lower pressure by pushing up on the paper. This creates lift.
2. Now fold a piece of paper into a loop. Use a piece of clear tape to secure the ends together and insert a pencil into the opening. Blow across the top of the loop in the same way that you blew across the piece of paper earlier. The loop should rise. You may want to experiment with different loops, short loops with flat bottoms and very curved tops or very long loops.
3. How is lift created by the movement of air over these loops? Explain below:

Project Activity #4 - Forces of Flight

Concept:

- There are four forces that act on an aircraft when it's flying. Thrust is the forward force that is provided by the engine. Lift is the upward force provided by the wings. Drag is the force that opposes thrust. It is caused by the friction of the aircraft moving through the air. Gravity is the force that opposes lift.

- As long as thrust is greater than drag, the plane will go forward. As long as lift is greater than gravity, the plane will continue to rise. So in order for a plane to lift off the ground and stay in the air, it needs a large amount of thrust and lift. If drag and/or gravity were to become larger forces than the thrust or lift, then the plane would crash!

- This activity is basic in that it involves two deceivingly simple activities. Each activity, however, embodies larger principles of flight that will become apparent in later activities.

- The ***Maple Seed (Flyer)*** spins slowly to the ground. This is an adaption by the Maple tree to help the seed in slowing its decent, catch an available breeze, and spread further from its parent tree. When the wings of the Flyer are bent the opposite way, the spin is changed to the other direction. This has to do with the leading edge of the fold in the paper wing. The wing is bent outwards from the seed, and as it falls is bent into a curved shape. This then produces a shape like a wing, and lift is created. The lift isn't enough to keep the seed in the air (lack of thrust), but it does create a difference in air pressure, that turns the seed. This concept of creating different curves on an aircraft other than the wings to turn an airplane is crucial in controlling an airplane in the air.

- The ***straw flyer*** is based on the engineering improbability that bees aren't supposed to be able to fly! Their weight and size to wing shape is such that mathematically flight should not be possible. However, if one considers the outline shape of a bumblebee, and the airflow around them, then not only is flight possible, but bees can carry very heavy loads!

- Without getting too detailed, this is also the same principle on which the Space Shuttle was designed. The Space Shuttle has a very small wing span for the weight of the craft and its cargo. The straw flyer is included as an activity because it represents a basic concept behind the shape of a rocket body. It is also pretty neat and is very responsive to adjustments in positioning of the wings, and force of thrust. Many paper airplanes fly simply because they are hurled through the air by brute force. Straw flyers require their designers and pilots to use care in order to achieve success

Key Objectives -

- explain the four forces that affect an aircraft in flight
- make a Maple Seed Flyer and explain how its spiral is controlled
- design and fly a straw flyer that will fly straight and level

Project Activity #4 - Forces of Flight

Blast Off One: Maple Seed Flyer

If you have a maple seed available, hold it high and drop it. Watch as it spirals downward. Why did it spiral instead of just dropping like a ball? Could it be because of wing shape?

If you don't have a maple seed available, you will want to make a Maple Seed Flyer for this activity. To make one, use the pattern at the end of this section.

Once you have made one, attach the paperclip to the bottom, fold out the "wings" each in a different direction, and let it drop. It should windmill down in the same way that the maple seed would drop. Why did the Maple Seed Flyer spiral instead of just dropping like a ball? Again, could it be because of wing shape?

Make your own Maple Seed Flyer and experiment with wing length.

You can try this several times, experimenting with wing length. You can also try bending the wings of their flyers in different directions. Does the Flyer now spin differently? Why? Note the fold in the paper, as well as the wing shape that is produced when the Flyer falls. Can you make the connection between the shape of the Flyer wing and wing shape learned in the previous lesson? If not, don't worry. The Flyer has two wings, and it spirals because lift on the wings turns the Flyer around and around.

Key Objectives -

- explain the four forces that affect an aircraft in flight
- make a Maple Seed Flyer and explain how its spiral is controlled
- design and fly a straw flyer that will fly straight and level

The Maple Seed Flyer Instructions:

- Out of a legal size piece of paper—fold longwise four times over. Cut along the folded line. (One piece of paper can make four flyers). **Figure 1**
- Cut on the two middle horizontal lines, and fold in. **Figure 2**
- Fold the bottom flap up. **Figure 2**
- Cut the vertical line at the top and fold paper in opposite directions to create two flaps. **Figure 2**
- For best results, attach a paper clip to the bottom. **Figure 3**
- Drop and watch it spin!

Figure 1:

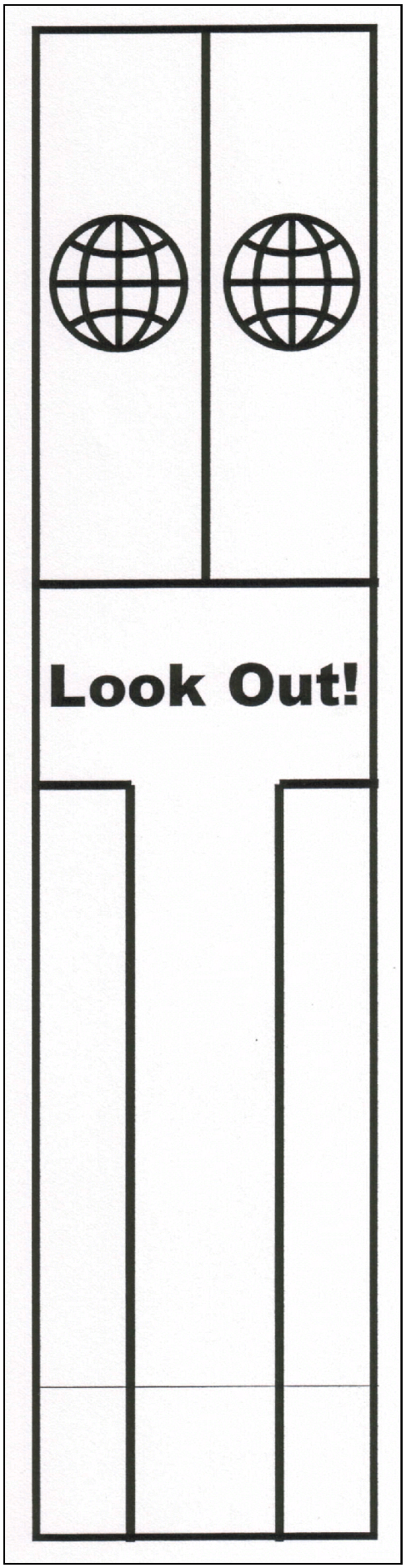

Figure 2:

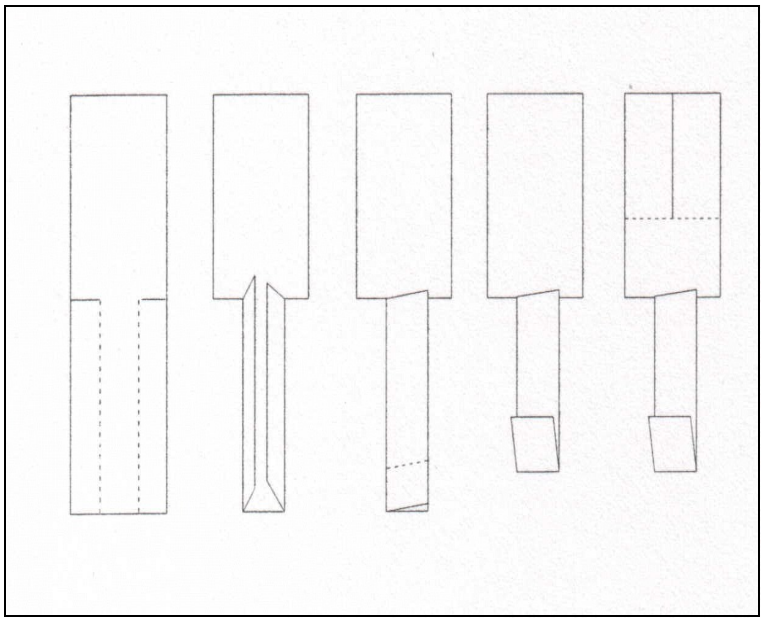

Figure 3:

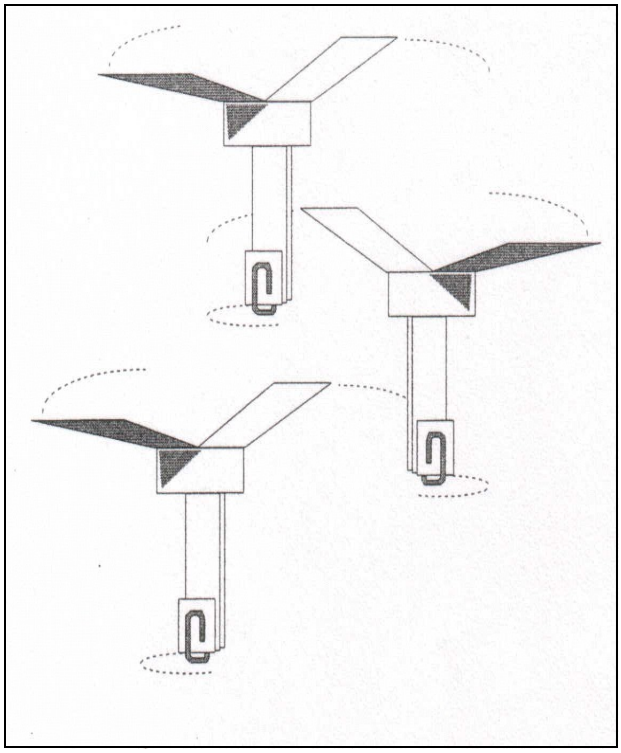

Project Activity #4 - Forces of Flight

Blast Off Two : Straw Flyer

- Use the diagram below to help you make a straw flyer. **Figure 1**
- Essentially, the straw flyer is a small loop of paper at the front of a straw and a larger loop of paper at the rear of the straw. Both loops should be pointing up when you throw it. You should also throw it with a smooth forward motion, much like throwing a dart. Make sure that the small loop is facing forward. The difference in sizes of the loops, as well as their closeness to each other, has an effect on its flight.
- Throw your straw flyer. Can you guess what the effect would be of changing the loop size, position, etc.?
- Try to discover which straw flyer will fly the farthest straight distance (harder than it seems).

Instructions :

- One 8 1/2 inch by 1 inch piece of paper
- One 11 inch by 1 inch strip of paper
- A paper straw
- Create your flyer using the diagram below

Figure 1:

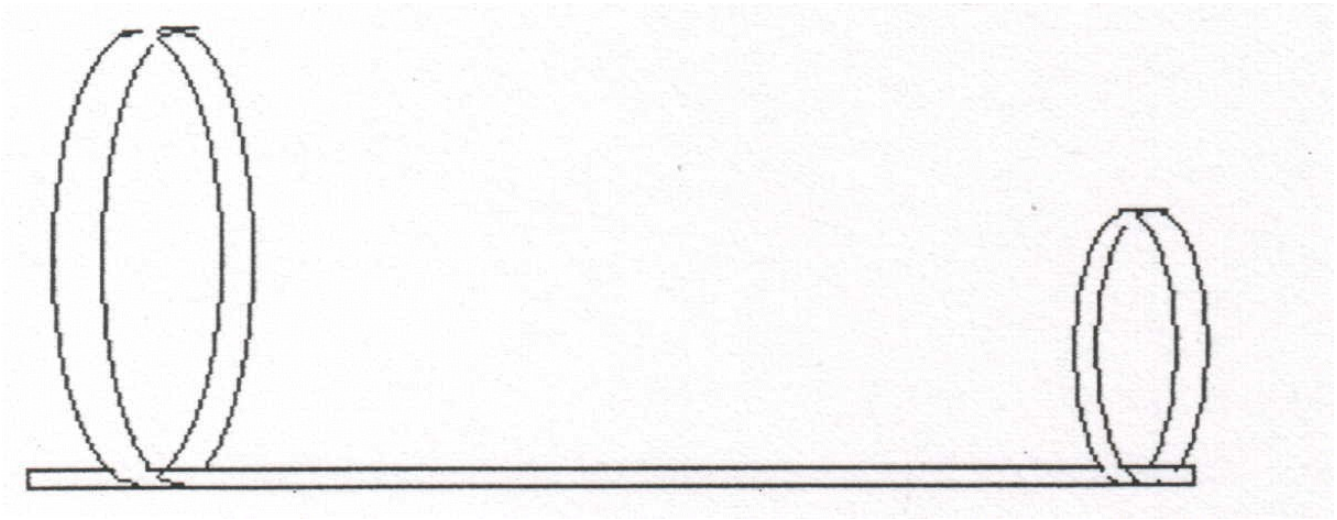

Project Activity #5 - Controlling Flight

Concept:

Pilots need to control the direction that their aircraft fly. They also need to react to changes in wind speed and direction. Mountains are also to be avoided! But how?

There are four main controls that a pilot uses to control his/her airplane.

1. The engine controls thrust which keeps the plane up in the air.
2. The ailerons are on the trailing edges of the wings. They can make the plane roll over, or do a barrel roll (or keep from doing one). It is important to know that when one aileron points up, the other one points down. This has to do with wing shape and direction of spin as hinted at in the Maple Seed Flyer activity.
3. The tail of the plane (vertical stabilizer) is like a rudder in a boat. It controls the way that a plane turns. You can call the rudder a rudder, or use the correct term, vertical stabilizer. This also has to do with the creation of a new curved surface (wing shape) and therefore lift in a new direction.
4. If you can imagine an airplane resting on a large pin, and turning around on it, much like a compass needle, you will better understand that the vertical stabilizer controls this type of turn. The technical word for this type of turn is called, “yaw”.
5. The little wings at the back of the plane (horizontal stabilizer) are also called the elevators. These can make the plane pitch up or down. Once again, the new curved surface creates a secondary lift in a new direction.

Pilots use combinations of these controls to change the direction, speed and altitude of aircraft. However, knowing how the different controls affect the direction of an aircraft will take away much of the mystery of how planes fly. This activity is more involved than the previous ones in that it begins to incorporate many of the individual concepts learned to this point.

Key Objectives -

- design and build a styro glider
- explain and demonstrate that the ailerons control roll
- explain and demonstrate that the vertical stabilizer controls yaw (turning on a point)
- explain and demonstrate that the horizontal stabilizer controls pitch (nose up or down)

Required Materials

- Black-line master of styro glider
- Small styrofoam meat tray
    - (the ones without the raised bumps work best) 2 - 3 per member to allow for mishaps
- Masking tape
- Penny

Project Activity #5 - Controlling Flight

Blast Off One: Styro Glider

You will need the materials as listed.

- Tape the black-line to the Styrofoam tray and cut out the styro glider parts. It may be helpful if you use a pin to poke a series of holes along the outline of the parts. Then you can remove what is left of the black-line and follow the pattern of holes in cutting out the parts.
- Make sure that all the edges are trimmed neatly. This will reduce drag and improve performance.
- Also, as you bend the control surfaces in different directions, you will find that they may break off. Use masking tape to loosely hold the flaps in place. It will be easier to move the controls now and demonstrate the different flight combinations.
- As you get proficient in flying your styro gliders, demonstrate that you can pilot their planes in these following patterns:
    - •straight and level
    - •barrel roll clockwise
    - •pitch up
    - •yaw left
    - •fly upwards to the left
    - •fly downwards to the right
    - •show off a trick of their own design

Optional Activity
Design your own airplanes made of similar or different materials. Have a showcase of their creations, you may want to call it a "Flying Circus".

Black Line Master for Styro-Glider

1. Tape the black-line of the glider parts onto a styrofoam tray of about the same size.
2. Use a straight pin to poke holes along the lines of the glider parts.
3. Take the paper off the tray, and using a single edged razor blade, or an Exacto Knife, cut out the parts of the plane.
4. Assemble the parts of the glider so that it looks like the picture at right.

Figure 1:

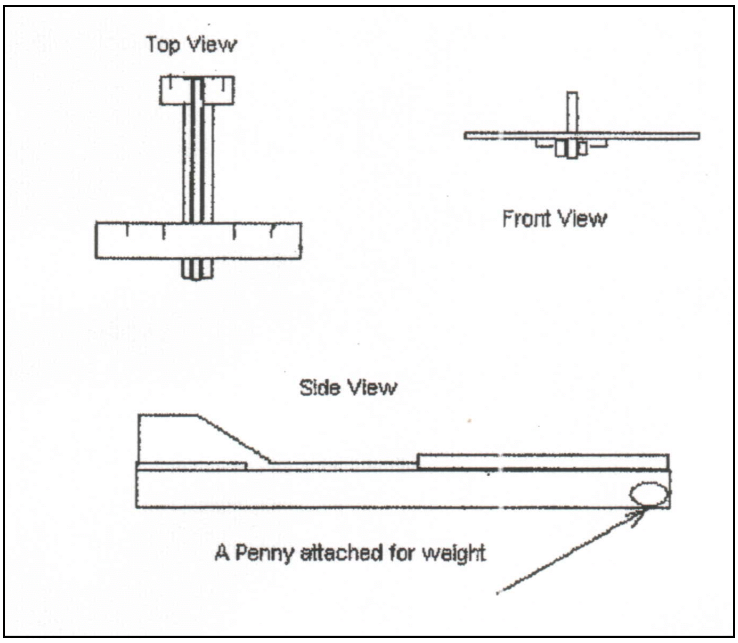

Figure 2:

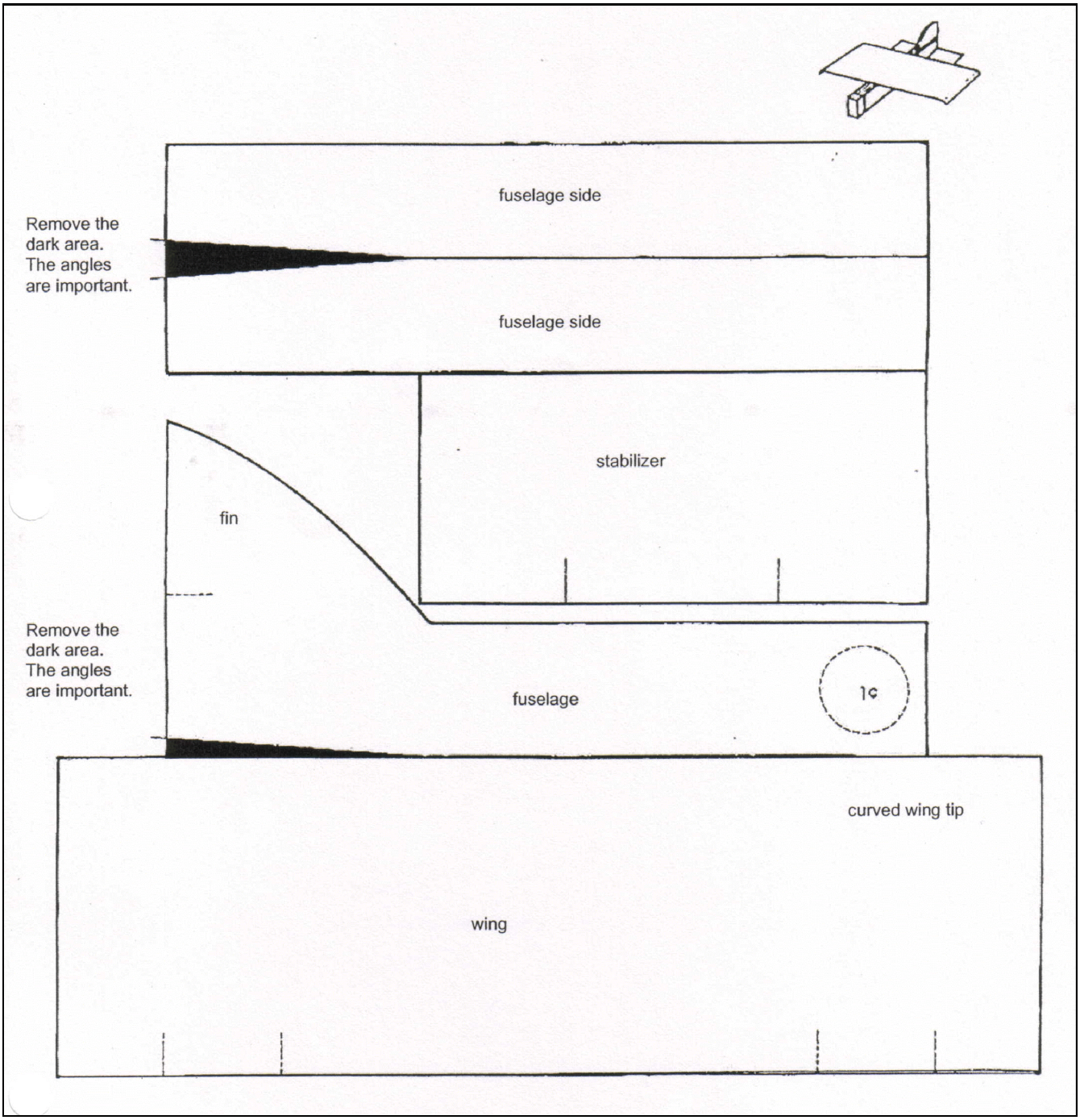

Project Activity #6 - Intro to Rockets

Concept:

- Aircraft and Rockets share many of the same flight principles. The first and most noticeable difference between the two is the immense size of most rockets. Much of the size of a rocket is devoted to carrying the fuel for its engines. These engines are required to lift the rocket and its payload into space, against the tremendous pull of Earth's gravity. Another noticeable difference is that rockets don't seem to have wings, but rather fins. This is true, in that a rocket can be more favorably compared to an arrow than an airplane. However, the principles of flight that govern airplanes and arrows, also governs rockets.

- This activity is largely academic in nature, in that it focuses your attention to similarities and differences between rockets, which also includes missiles, and airplanes.

- This activity is also different from the previous ones in that it is an open and ongoing activity. The final report is not expected until the conclusion of this unit on rocketry. The activity outlined below will help you get started, and will hopefully track your understandings of key concepts as the rest of this unit progresses.

- You will be able to scratch the surface of this activity by brainstorming. You are encouraged to research the development of rocketry, or one of the many pioneers in space science. You may instead wish to explore one of the many programs that are currently underway by the Canadian Space Science Program, or by NASA.

- Essentially this activity will engage you in developing a curiosity about rocketry and space science. You will then more fully appreciate the difficulties encountered by early pioneers in rocket science as they tried to launch their own homemade rockets.

Key Objectives -

At the end of this project meeting, you should be able to:

- explain at least three differences between rockets and aircraft
- maintain an ongoing KWL chart on your learning

Project Activity #6 - Intro to Rockets

Blast Off One: Aircraft and Rockets

- Use the circle chart pictured below to brainstorm the similarities and differences between aircraft and rockets. List differences in individual circles. List similarities in overlap of circles. Fill in the chart as best you can. Hopefully this will lead to more questions about space flight and lead you into further research.

Figure 1: Example

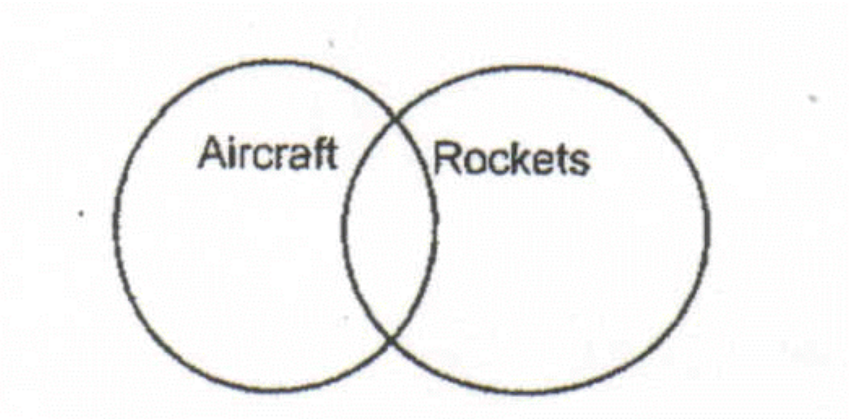

Required Materials

•Chart paper
•Markers
•Paper
•Pens, pencils, etc.

Blast Off Two: K W L Chart

- You have been doing some initial research on Rocketry and Space Exploration. Enter in the first column the things that you already know about rockets. For example, you may write that rockets go into outer space. You should write down at least seven facts that you are sure of in this column. Use this as a review of the flight principles already learned in this project.

- In the middle column, you should make a list of at least seven questions that you would like to research and have answered.

- The third column should remain blank, and filled in as you find out the answers through your research and experiences in tackling the activities outlined in the rest of this unit.

Figure 2: Example

Know	Want to Know	Learned

Project Activity #7 - Rocket Propulsion

Concept:

- Rockets have been used in many forms for centuries. The ancient Chinese used rockets for weapons in warfare and as fireworks as long ago as 1200.

- Rockets have evolved over the years, but remain pretty basic in their flight principles. In order to escape Earth's gravity, a rocket requires an enormous amount of thrust to climb past earth's atmosphere. It also requires at least three fins to stabilize its flight.

- There is only one opening for the explosion of rocket fuel to leave the rocket. As the burning energy pushes to get out of the rocket, the rocket is in turn pushed upwards.

- The balloon in the first activity doesn't have rocket fuel in it, but it does have air pressing outwards on all sides. If you can imagine that this air is rocket fuel, and that the balloon is the rocket body, then understanding rocket propulsion will be easy.

- The Alka Rocket is just plain fun! It helps to demonstrate to members that when certain chemicals combine the results can be explosive. The top of the film canister pops off because the Alka Seltzer tablet in water produces an enormous amount of carbon dioxide. This builds up in gasses and presses on all sides equally. As the pressure builds, the only surface that can let go is the top. And let go it does! This activity easily lends itself to helping members understand that chemical reactions can build up enormous pressures that can be used as a source of thrust.

Key Objectives -

At the end of this project meeting, you should be able to:

- explain how an imbalance of forces will cause a rocket to have thrust
- explain how chemical reactions can lead to a build up of forces that can be used as a propulsion system for rockets

---

Required Materials

- Fishing line
- Straw
- Long balloon
- Clear white film canister, one per member (they pop better than the black ones with grey lids)
- Alka Seltzer Tablet, one per member (caution members not to taste or take internally)

Project Activity #7 - Rocket Propulsion

Blast Off One: Balloon Propulsion

- What are your predictions on what would happen if the balloon was filled with air and then released. Give it a try, fill the balloon with air and release it. What did you observe?

- Would a balloon be able to lift a rocket into space? If not, then could a balloon show how a rocket engine works? What are the possibilities? Set up a fishing line as noted below.

- Pull the fishing line through the straw and tie each end of the line to something secure. Make sure that the line is taut. Also make sure the straw can move easily over the line. Then inflate the balloon and get some help taping the balloon to the straw.

- Before you release the balloon, remember that inside the balloon air is pressing against all the sides. There is only one way that the air can get out of the balloon and as the air rushes to leave the balloon, the straw is thrust forward. Is it possible for the balloon to travel across the room?

- Release the balloon. Did you think it worked as well as you predicted?

Leader Tip ...

Without adding a tablet, you may want to demonstrate the actions to your members first before the little race. When you see that the members are ready, begin a countdown, and when you get to the word, "LAUNCH", watch the excitement!

Blast Off Two: Alka Rockets

Safety NOTE: Be sure you don't stand over the canisters. Slap the lid on and stand back.

- You should have before you a film canister with the lid off, filled to about a third with water, and an Alka Seltzer Tablet.

- This is going to be a race with your fellow project members. To get ready for the race, put the tablet in one hand and the lid to the canister in the other hand. Make sure that the lid is face up on your hand so that when the hand is turned over to place the lid on, it will snap in easily (and quickly which is key to the surprise). When you hear the word, "LAUNCH", from your leader, you should slap the tablet into the canister to be sealed in immediately by the lid to the canister.

- Did your canister exploded? How does this work? Rockets can be propelled by highly explosive chemicals that leave the rockets through their nozzles at the bottom.

Project Activity #8 - Stable Rocket Flight

Concept

- Rockets have been in use since the 1200's when ancient Chinese soldiers used rockets in warfare. Rockets have also been used to propel fireworks into the air. Rockets can be as small as a firecracker, or as large as a Saturn V (111 m tall).

- While escaping the Earth's gravity, the rocket must be held on course. Complex guidance systems do this, but it helps to imagine that a rocket is essentially the same in form as an arrow. The feathers of an arrow act like vertical stabilizers (rudders) that keep the arrow straight in flight. Likewise the fins of a rocket act in the same way for the rocket.

- Another important point to keep in mind when designing arrows and rockets is the centre of gravity. If you were to balance an arrow across your finger, the point where it balances is the centre of gravity. If you were to tie a string to this point, you would be able to spin the arrow around in a smooth circle. If you were to move the string even a centimetre in either direction, the arrow would tumble end over end. Notice that the centre of gravity shows where the arrow is equally divided in weight, not length. If in a rocket, the centre of gravity was too far forward, towards the nose cone, then the rocket would tumble out of control. If the weight was too close to the engine, then the rocket would tumble again and crash.

- In the first activity, you will try this arrow demonstration. Proper adult supervision must be used.

- In the second activity, you will make stomp rockets. You will need to test for centre of gravity in your rocket. This can be done by a swing test as was done with the arrow.

Key Objectives -

At the end of this lesson, you should be able to:

- explain the role of the fins in rocket control
- explain the role in centre of gravity in rocket design
- design and test a pneumatic (air powered) model rocket

Required Materials

- Arrow
- String (1 to 2 m long)
- File folders (used legal or letter sized)
- Tape
- Scissors
- Pens, markers, etc.
- A Stomp Rocket Launch System

Project Activity #8 - Stable Rocket Flight

Please NOTE: A Stomp Rocket is basically a tube with fins and a nose cone. It sits on a stomp rocket launcher.

- A stomp rocket launcher has only four parts, all of which are readily available at any local hardware store. The items that you require to build one are: a collapsible water jug (the type used for camping), clear plastic tubing (old garden hose will do just as well), one 90 degree elbow to fit the tubing, a length of rigid pipe or tubing to fit the elbow.

- To launch the rocket, it is placed over the rigid tube. The tube should fit snugly, and yet be able to slide off easily. Launching the rocket is fun! Put the jug of air on a chair seat and have each member launch their rocket by hopping onto the bag.

Blast Off One: Centre of Gravity

- The arrow is a lot like a rocket. Both have fins and are long and mostly straight. They both have something that isn't easy to see. It's a centre of gravity.

- The arrow balances across your finger. This is the point of balance. Next attach the string and after making sure you are out of harm's way, spin around in a circle, making the arrow fly in a smooth path.

- The centre of gravity of the arrow should be near the middle, or the rocket will tumble end over end. This is why you have to test your stomp rocket in the next activity before you launch it. You might have too much weight at the front, or rear of the rockets, and will have to make the proper adjustments.

Figure 1:

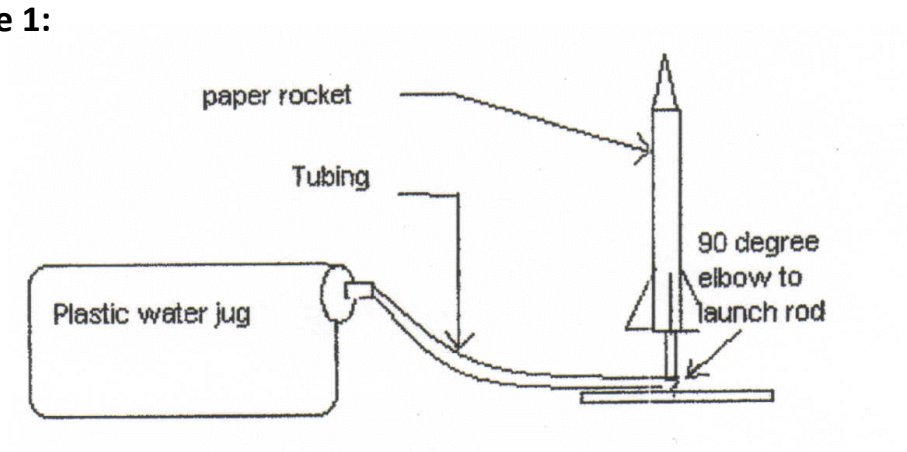

Blast Off Two: Stomp Rockets

You will each be making a Stomp Rocket. A stomp rocket is a tube of paper (old file folders work very well) with fins (at least 3) and a nose cone. The fins should be straight, and that a lighter rocket almost always makes a better rocket. The nose cone should be straight and works well if it's tucked into the tube. A small stretch of tape to hold the nose cone on, and smooth out the edge between the cone and the tube will go a long way to ensuring success.

Project Activity #9 - Model Rocket Flight

Important Information:

This project meeting requires the use of model rocket kits and a launch system. Many good inexpensive kits (that are re-usable) can be purchased in hobby stores, large department/toy stores or online. Only one launch system is required in order for the whole group to participate. You can purchase individual launch systems if you would like to pursue a hobby in model rocketry.

This meeting may take a little longer or may need to be broken into two meetings.

Also ... it is important to read the safety information that comes with the model rocket kits, and make sure that you follow the basic safety precautions that were outlined at the previous project meeting.

Concept:

- By now you have a good grasp of the key elements in controlling the flight of airplanes and rockets. Model rockets, when built according to the instructions provided and materials supplied are a sure bet. Home made rockets are much more of a gamble, but fun nonetheless!

- At this point, it is important to know a few more facts about rocket flight, more specifically, model rocket flight.

- Model rockets are powered by solid chemical engines. They burn for a pre-determined number of seconds, coast, and then a small chemical charge blasts itself forward in the rocket tube ejecting the parachute. The flight of a model rocket follows three stages. The first stage is called lift-off. This stage ends when the rocket engine quits firing.

- The second stage is called Coasting Flight. This is the time between the end of the lift-off and the ejection charge. The amount of time that the rocket coasts is determined by the rocket engine. The coasting phase can last for as little as three seconds, or all the way to ten or more seconds. The third phase is the ejection and landing phase. This stage is marked by the ejection of the nose cone and the return of the rocket to the surface.

- Essentially a successful mission is characterized by a safe launch, straight and even rocket ascent, and a smooth landing in which the rocket is recovered and is undamaged

Key Objectives

- describe the three stages of rocket flight
- assemble a model rocket and launch it
- observe and follow safety precautions specifically suited to launching model

Project Activity #9 - Model Rocket Flight

Required Materials

- As noted above, each member will require a model rocket kit. It is best if they purchase one that has extra engines and igniters.
- A model rocket launch system will also be required.

If home made rockets are to be built, additional material required are:

- Old file folders
- Straws
- Tape
- White glue
- Scissors

Blast Off One: Rockets Away

- You will be assembling model rockets.
- Go ahead and get started with your models. Your leader may assist you with your models.
- Test launch your rocket.
- Your project group may want to plan a special launch celebration share your success with your families.

Optional Activities

Translate the design features used in your model rocket kits to making home made rockets.
It is worthwhile that you know ahead of time that you may use the nose cones from your models in building your own rocket, if you choose to do this.

Blast Off Two: K W L Chart

- Enter in the first column the things that you already know about rocket flight. You should write down at least seven facts that you are sure of in this column. Use this as a review of the flight principles already learned in this project.

Figure 2: Example

Know	Want to Know	Learned

Project Activity #10 - Celebratory Launch

At this point, you have completed all the developmental activities as set out in this project!

- This final lesson is a chance for your leader to evaluate the learning of the members, and a chance for the members to present their findings to their peers, and parents.

Showcase What You Know

Use your KWL charts to help you organize what you learned. The form of presentation can vary according to the wishes of your leader and your ability. Information could be presented in many forms, some of which are: posters, pamphlets, written reports, speeches, computer presentations, displays, etc. The best results are almost always obtained when you present your information in the style of your choice.

Required Materials

- Model rockets
- A model rocket launch system
- Member presentation materials

Make it a Celebration!

Do your "Learning showcase" presentation, then have your project group do an official rocket launch of their models.

Key Objectives

- showcase learning
- launch rockets
- celebrate success

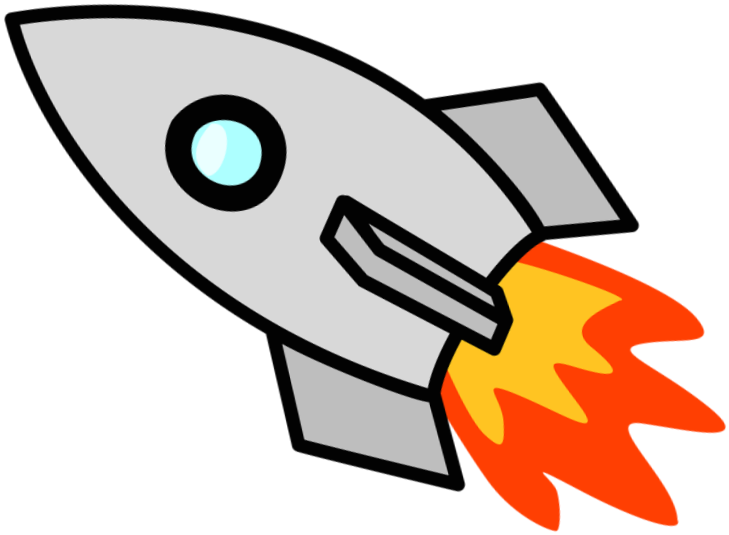

4-H Judging

Judging is an important skill that you will use in 4-H and beyond. As a 4-H member, judging will help you develop important assessment skills, and with practice, you will learn to carefully **observe, evaluate, make decisions, communicate with confidence.**

Is Judging a requirement for THIS project?

Judging is not a requirement for **ALL** 4-H PEI projects, but you are encouraged participate in the practice whenever possible.

- When Judging is a requirement, it will be listed in the PCR's (Project Completion Requirements) on the front page of this member booklet. Members will need to fill out the score card below showing that the activity has been completed. The judging activity will be arranged by your project leader!
- When Judging is not a requirement, members and leaders may use the information and scorecard below for practice and learning. The skills learned from 4-H judging are used in everyday life situations, so it is always a useful skill to build!

Score Card for Judging

I place this class of: _____ in the order of _____ _____ _____ _____
(Description - specify type of animals or items) *(1st)* *(2nd)* *(3rd)* *(4th)*

I place _____ over _____ because:
Reasons: _____
_____

I place _____ over _____ because:
Reasons: _____
_____

I place _____ over _____ because:
Reasons: _____
_____

I place _____ at the bottom of this class because:
Reasons: _____
_____

For these reasons, I place this class of: _____ in the order of _____ _____ _____ _____
(1st) *(2nd)* *(3rd)* *(4th)*

4-H MEMBER OPPORTUNITY - Provincial 4-H Judging Competition (Annual Event)

This event is open to all members, ages 9-21, and offers a great opportunity to learn more about judging in a competitive atmosphere (Three age categories & cash prizes awarded to top members for their judging abilities). Senior members (17-21) also compete for the chance to join the **Maritime 4-H Judging Team** to compete at **Agribition** (Regina, SK) in November.

- **4-H Canada Learns** is a resource tool providing information on 4-H projects from different provinces. Check out www.4-h-learns.org/resources - keyword "judging" for resource documents that will help with developing and building your judging skills!
- **4-H PEI** is able to provide information to members and leaders on both livestock and non-livestock judging practices. Check with your 4-H Specialist for more information **AND** be sure to check out the 4-H PEI Judging Resource page at www.4hpei.ca

4-H Year Completion Checklist

In addition to completing a Skill Based 4-H project, members are also required to participate in Communications, at least **ONE** Ag. Awareness Activity and **ONE** Community Service Activity in order to complete the 4-H year.

Use the space provided to reflect on what you have learned through participation in these activities.

If this information has already been completed in another booklet, please indicate where it can be found:

My Communications Activity

☐ Speech ☐ Demonstration (Single) ☐ Demonstration (Team) ☐ Alternate Communications: _____

What I learned: _____

What I can work on: _____

Agriculture Awareness Activity

What did you do to complete this activity this year? (Either on your own or with your 4-H Club)

What area of Agriculture would you like to explore in the future?

Community Service Activity

What did you do to complete this activity this year? (Either on your own or with your 4-H Club)

What will you do in the future to give back to your community?

4-H PEI - Staff Comments (Optional)

Completion Requirements		**Completion Notes**
Skill Based Project		
Communications		
Ag. Awareness Activity		
Community Service Activity		

Member Reflection

As a 4-H member, you are encouraged to "Learn to Do by Doing" through hands-on activities. Keeping a record of your 4-H activities with this **Member Reflection** will provide helpful insight for you, your leader and the 4-H Specialist as to skills you have learned and projects you have completed throughout the 4-H year!

Skill Based Project: You are encouraged to work on skill development and completion of project requirements (with guidance from the project leader) throughout the 4-H year. Not every activity will have a tangible item (for display), but you are asked to share the activities and learnings in which you participate below...

Project Activity: _____

What I did: _____

What I learned: _____

What I liked: _____

Project Activity: _____

What I did: _____

What I learned: _____

What I liked: _____

Project Activity: _____

What I did: _____

What I learned: _____

What I liked: _____

Project Activity: _____

What I did: _____

What I learned: _____

What I liked: _____

Project Activity: _____

What I did: _____

What I learned: _____

What I liked: _____

(feel free to use more space if necessary!)

LEADER COMMENTS (optional): Leader observations can be helpful to you in future years with this and other 4-H projects. Be sure to ask your project leader if they would like to reflect on your 4-H year.
I am most impressed by…
I believe that you have learned…
In the future I encourage you to...